KEYBOARD, SYSTEM BOARD POWER SUPPLY

See Folder CSCS7

MONOCHROME MONITOR

See Folder CSCS7-B

CSCS7-A APPLE MODEL IIc

INDEX

SAMS™ Howard W. Sams & Co., Inc.
4300 West 62nd Street, P.O. Box 7092, Indianapolis, Indiana 46206 U.S.A.

4300 West 62nd Street, P.O. Box 7092, Indianapolis, Indiana 46206 U.S.A.
Printed in U.S. of America. 85CS14956 DATE 9-85

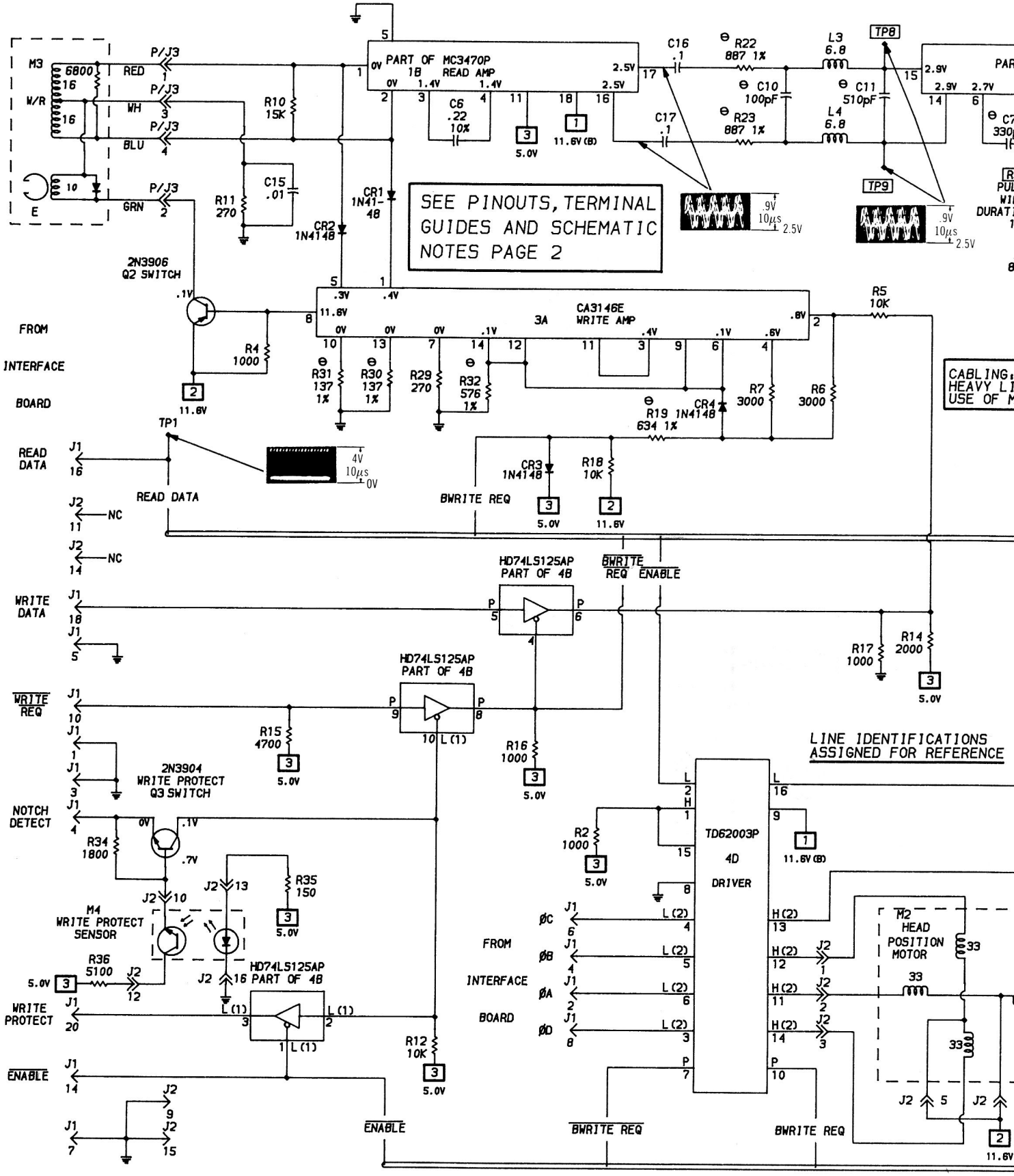

A PHOTOFACT STANDARD NOTATION SCHEMATIC WITH CIRCUITRACE™

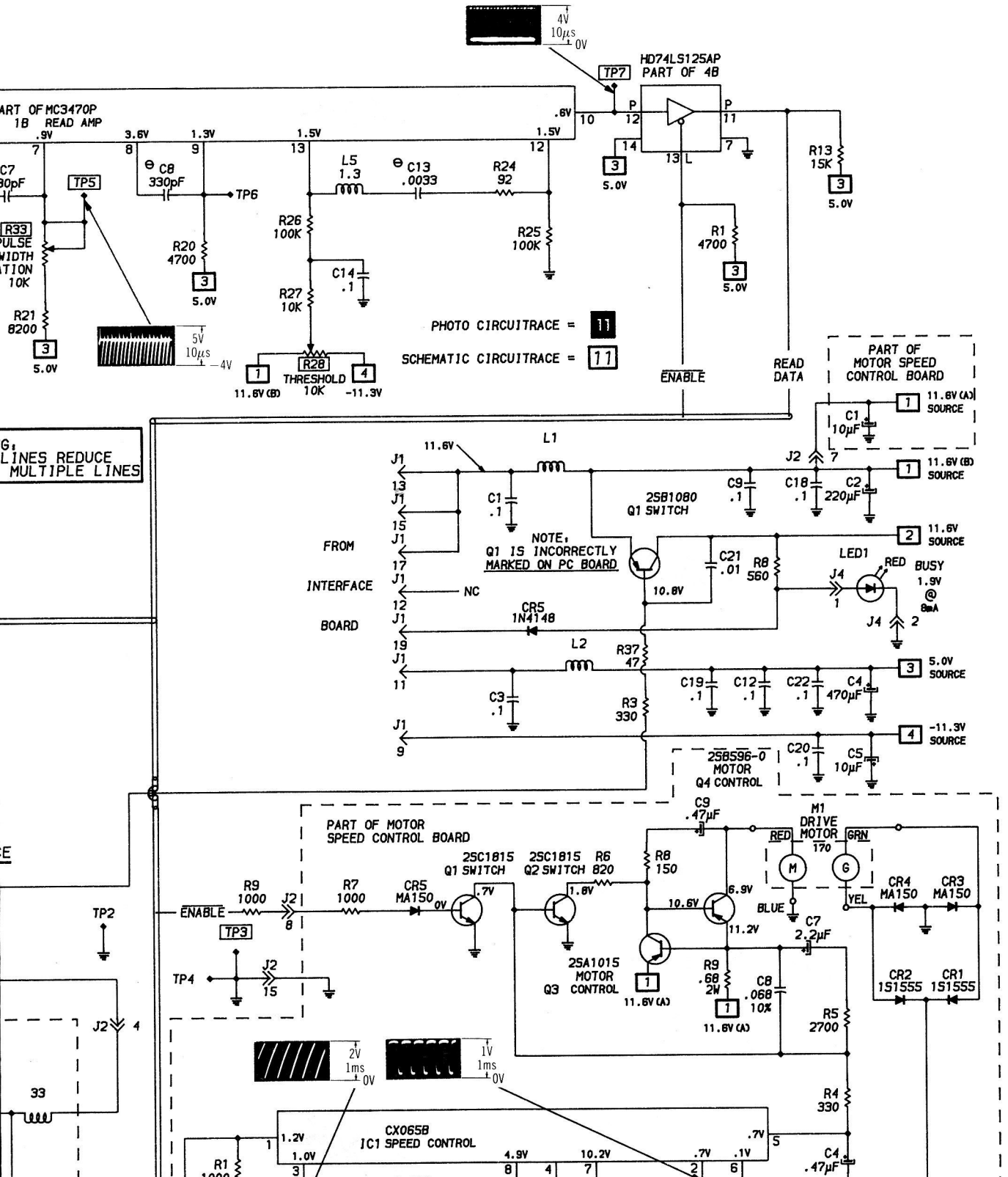

Circuitry r
Circuitry u
See parts
Ground
Chassis
Waveform
otherwi
Voltages,
Drive whil
and during
noted. Ar
programs
Caps Lock

10 DS = C
20 PRINT
30 PRINT
40 FOR X
50 PRINT
60 NEXT
70 PRINT
80 GOTO

DISK DRIVE

APPLE MODEL IIc

IC PINOUTS, TERMINAL GUIDES & SCHEMATIC NOTES

TERMINAL GUIDES

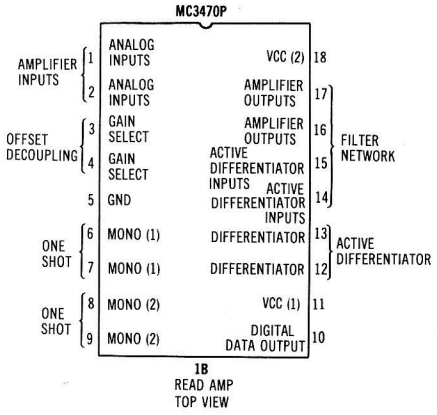

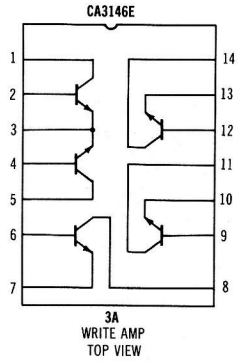

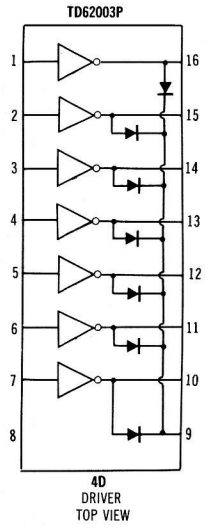

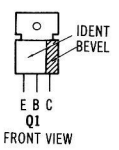

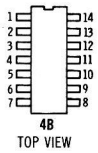

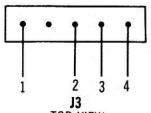

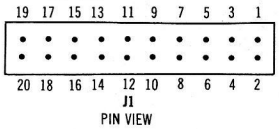

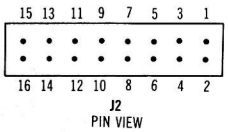

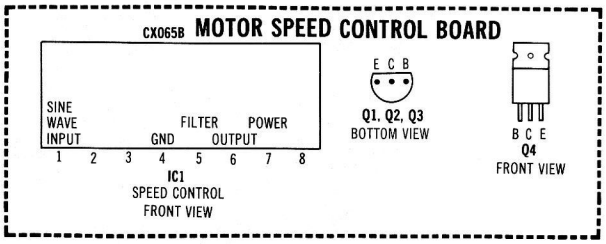

SCHEMATIC NOTES

itry not used in some versions
itry used in some versions
arts list
nd
sis
forms and voltages taken from ground, unless noted erwise
ges, logic readings and waveforms taken on the Disk while running the following program (with DOS 3.3) uring the period when the Head is not moving unless . An initialized diskette, with DOS 3.3 only (no other ams or data), was used in the Disk Drive. Note: Put the Lock key in the down position.

```
S = CHRS(4)
RINT DS; "OPEN SAMS"
RINT DS; "WRITE SAMS"
OR X = 1 TO 50
RINT "THIS IS A TEST"
EXT X
RINT DS; "CLOSE"
OTO 20
```

Waveforms taken with triggered scope and Sweep/Time switch in Calibrate position, scope input set for DC coupling on 0 reference voltage waveforms. Switch to AC input to view waveforms after DC reference is measured when necessary. Each waveform is 7 cm. width with DC reference voltage given at the bottom line of each waveform.

Time in μsec. per cm, given with p-p reading at the end of each waveform.

Item numbers in rectangles appear in the alignment/adjustment instructions.

Supply voltages maintained as shown at input.

Controls adjusted for normal operation.

Terminal identification may not be found on unit.

Capacitors are 50 volts or less, 5% unless noted.

Electrolytic capacitors are 50 volts or less, 20% unless noted.

Resistors are ½W or less, 5% unless noted.

Value in ( ) used in some versions.

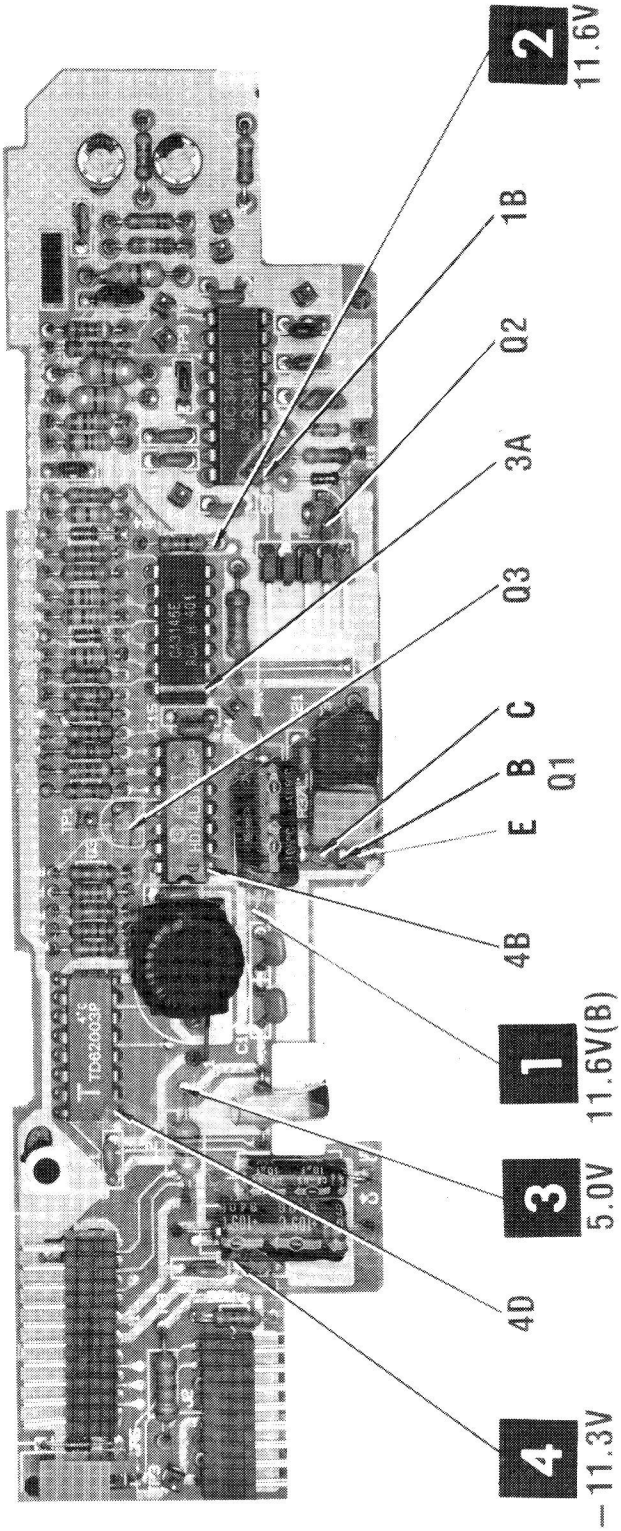

ARROWS ON IC'S INDICATE PIN 1 UNLESS NOTED.

A Howard W. Sams CIRCUITRACE® Photo **DISK DRIVE ANALOG BOARD**

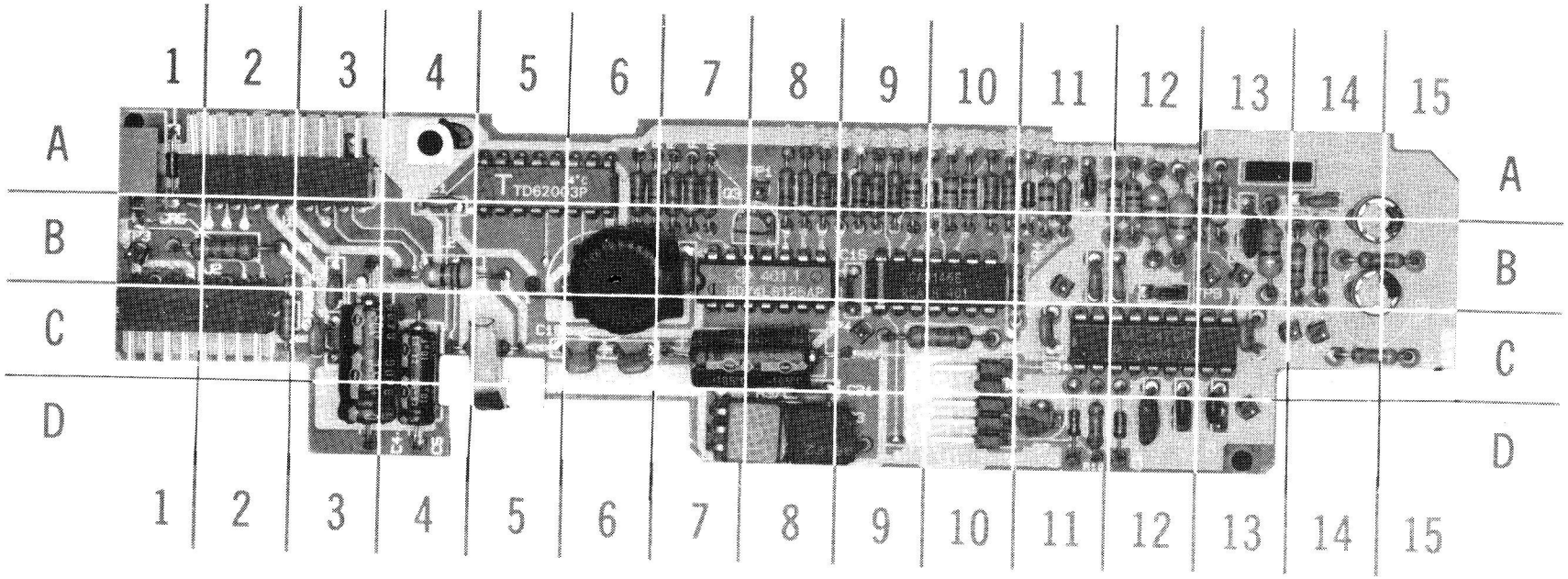

A Howard W. Sams GRIDTRACE™ Photo

DISK DRIVE ANALOG BOARD GridTrace LOCATION GUIDE

C1	A-4	C18	C-6	L4	A-12	R13	A-7	R30	A-9
C2	C-7	C19	C-6	L5	B-13	R14	A-9	R31	A-10
C3	B-3	C20	C-3	Q1	D-8	R15	A-8	R32	A-10
C4	C-3	C21	D-8	Q2	D-11	R16	A-8	R33	B-14
C5	C-4	C22	B-7	Q3	B-8	R17	A-9	R34	A-7
C6	D-12	CR1	D-12	R1	A-7	R18	A-11	R35	C-5
C7	D-12	CR2	D-11	R2	A-6	R19	A-11	R36	C-2
C8	D-13	CR3	A-11	R3	D-8	R20	C-14	R37	D-8
C9	C-11	CR4	A-10	R4	B-11	R21	B-14	TP3	B-1
C10	A-11	CR5	A-1	R5	A-9	R22	A-12	TP5	C-14
C11	B-12	J1	A-2	R6	A-9	R23	A-12	TP7	B-13
C12	C-13	J2	C-1	R7	A-10	R24	A-13	TP8	B-11
C13	B-13	J3	D-10	R8	B-2	R25	A-13	TP9	B-13
C14	A-14	J4	A-1	R9	A-6	R26	B-14	1B	C-12
C15	B-9	L1	C-6	R10	D-11	R27	B-14	3A	B-10
C16	B-11	L2	B-4	R11	C-10	R28	A-14	4B	B-8
C17	B-12	L3	A-12	R12	A-8	R29	A-10	4D	A-5

DISK DRIVE ANALOG BOARD

CSCS7-A
APPLE MODEL IIc

TROUBLESHOOTING (Continued)

WILL NOT WRITE

Verify that the write protect circuit is functioning properly by inserting a diskette that is not write protected. Check for a Low logic reading on pin 3 of IC 4B. If the logic reading is not Low, see the "Write Protect Does Not Function" section of this Troubleshooting guide.

Insert a blank diskette in the Disk Drive and close the door. Type in and run the program given in the "Will Not Read" section of this Troubleshooting guide.

WARNING! Do not use a diskette containing important data when running this program. The program will write random data over any data already on the diskette.

With the program running, check for pulses at pin 8 of IC 4B. if the pulses are missing at pin 8 of IC 4B, check for pulses at pin 9 of IC 4B. If pulses are present at pin 9 of 4B, check IC 4B. If the pulses are missing at pin 9 of IC 4B, check the interface cable and Connector J1. If the $\overline{\text{BWRITE REQ}}$ pulses are present at pin 9 of IC 4B, check for WRITE DATA pulses at pin 6 of IC 4B. If the pulses are missing at pin 6 of IC 4B, check for pulses at pin 5 of IC 4B. If the pulses are present at pin 5, check IC 4B.

If the WRITE DATA pulses are present at pin 6 of IC 4B, check for pulses at pins 1 and 5 of Write Amp IC (3A). If the pulses are missing at either pins 1 or 5, check IC 3A. If the pulses are present at both pins 1 and 5 of IC 3A, check Diodes CR1 and CR2. Also check the read/write head coils and Connector J3.

ERASE HEAD

Verify that the erase head is not open by checking for continuity between pins 2 and 3 of Plug P3. If the erase head checks good, type in and run the program given in the "Will Not Read" section of this Troubleshooting guide.

WARNING! Do not use a diskette containing important data when running this program. This program will write random data over any data already on the diskette.

Connect scope to pin 8 of IC 3A and set the time base to 5mSec. With the program running, check for approximately 1.0V peak-to-peak pulses. If the pulses are missing at pin 8 of IC 3A, check IC 3A. If the pulses are present at pin 8 of IC 3A, check for approximately 13.0V peak-to-peak pulses at the collector of Switch Transistor (Q2). If the pulses are missing at the collector of Q2, check Transistor Q2.

WRITE PROTECT DOES NOT FUNCTION

If a write protected disk is being written on, use the following procedure to check the write protect circuit. Insert a write protected diskette in the Disk Drive and close the door. Type in and run the program given in the "Will Not Read" section of this Troubleshooting guide. WARNING! Make sure that the diskette being used does not contain important data since this program will write random data over the data already on the diskette.

With the program running, check for a High logic reading on pin 3 of IC 4B. If pin 3 of IC 4B is logic High, the write protect circuit is working. If pin 3 of IC 4B is logic Low, check for a logic High on pin 2 of IC 4B. If pin 2 of IC 4B is logic High, check IC 4B. If pin 2 of IC 4B is logic Low, check for approximately 0V at the base of Transistor Q3. If the base of Q3 is approximately 0V, check Transistor Q3. If the base of Transistor Q3 is approximately 0.7V, check for a shorted Write Protect Detector Phototransistor.

If pin 3 of IC 4B is logic High when attempting to write on a non-write protected diskette, check for a logic Low on pin 2 of IC 4B. If pin 2 of IC 4B is logic Low, check IC 4B. If pin 2 of IC 4B is logic High, check Transistor Q3. If Transistor Q3 is good, check the Write Protect Detector and Resistor R36.

LINE DEFINITIONS

BWRITE REQ ..... Buffered Write Request
ENABLE ..... Enable
READ DATA ..... Read Data
WRITE REQ ..... Write Request

Any Bar above any Alphabetical or numerical combination indicates line active in a low (0) state.

PARTS LIST AND DESCRIPTION

When ordering parts, state Model, Part Number, and Description

SEMICONDUCTORS (Select replacement for best results)

ITEM No.	TYPE No.	MFGR. PART No.	REPLACEMENT DATA					
			GENERAL ELECTRIC PART No.	NTE PART No.	ECG PART No.	RCA PART No.	WORKMAN PART No.	ZENITH PART No.
DISK DRIVE ANALOG BOARD								
CR1 thru CR5	1N4148		GE-514	NTE519	ECG519	SK3100/519	WEP925/519	103-131
Q1	2SB1080							
Q2	2N3906		GE-82	NTE159	ECG159	SK3466/159	WEP62/159	121-Z9003
Q3	2N3904		GE-123AP	NTE123AP	ECG123AP	SK3854/123AP	WEP736/123A	121-Z9000A
1B	MC3470P			NTE3470	ECG3470			
3A	CA3146E					SK3697		221-94
4B	HD74LS125AP		74LS125A	NTE74LS125A	ECG74LS125A	SK74LS125A		HE-443-811
4D	TD62003P			NTE2013	ECG2013	SK9093/2013		
DISK DRIVE MOTOR SPEED CONTROL BOARD								
CR1,CR2	1S1555		GE-300	NTE177	ECG177	SK9091/177	WEP1062/177	103-131
CR3 thru CR5	MA150		GE-514	NTE519	ECG519	SK3100/519	WEP925/519	103-131
Q1,Q2	2SC1815		GE-62	NTE85	ECG85	SK3124A/289A	WEP66/199	121-Z9065
Q3	2SA1015		GE-269	NTE290A	ECG290A	SK9132	WEP911/290A	121-Z9003*
Q4	2SB596-O		GE-250	NTE197	ECG197	SK3083/197	WEP757/197	121-988-03
IC1	CX065B							

* Lead configuration may vary from original.

WIRING DATA

Shielded Hook-up Wire	Use BELDEN No. 8401 or 8421 (Single-Conductor) 8208 (Two-Conductor) 9534 (Four-Conductor)
General-use Unshielded Hook-up Wire	Use BELDEN No. 8529 (Solid) Available in 13 Colors 8522 (Stranded) Available in 13 Colors
75-Ohm Input Lead	Use BELDEN No. 8241

PARTS LIST AND DESCRIPTION (Continued)

When ordering parts, state Model, Part Number, and Description

CAPACITORS

Items Not Listed Are Normally Available At Local Distributors.

ITEM No.	RATING	MFGR. PART No.
	DISK DRIVE ANALOG BOARD	
C7	330 NPO 50V 5%	

ITEM No.	RATING	MFGR. PART No.
C8	330 NPO 50V 5%	
C10	100 NPO 50V 5%	
C11	510 NPO 50V 5%	
C13	.0033 NPO 50V 5%	

CONTROLS (All wattages ½ watt, or less, unless listed)

ITEM NO.	FUNCTION	RESISTANCE	MFGR. PART NO.	NOTES
	DISK DRIVE ANALOG BOARD			
R28	Threshold	10K	8418(1)	
R33	Pulse Width Duration	10K	8418(1)	
	DISK DRIVE MOTOR SPEED CONTROL BOARD			
VR1	Speed	20K		

(1) Number on unit.

RESISTORS (Power and Special)

ITEM No.	RATING	REPLACEMENT DATA		
		MFGR. PART No.	NTE PART No.	WORKMAN PART No.
	DISK DRIVE ANALOG BOARD			
R19	634 1% 1/4W Metal Film			
R22	887 1% 1/4W Metal Film			
R23	887 1% 1/4W Metal Film			
R30	137 1% 1/4W Metal Film			
R31	137 1% 1/4W Metal Film			
R32	576 1% 1/4W Metal Film			
	DISK DRIVE MOTOR SPEED CONTROL BOARD			
R2	68K 1% 1/4W Metal Film			
R10	5100 3% 1/4W Metal Film		QW251	

COILS (RF-IF)

ITEM No.	FUNCTION	MFGR. PART No.
	DISK DRIVE ANALOG BOARD	
L1	RF Choke	
L2	RF Choke	

ITEM No.	FUNCTION	MFGR. PART No.
L3	Peaking	
L4	Peaking	
L5	Peaking	

PARTS LIST AND DESCRIPTION (Continued)

When ordering parts, state Model, Part Number, and Description

MISCELLANEOUS

ITEM No.	PART NAME	MFGR. PART No.	NOTES
LED1	LED		Busy, Red
M1	Motor		Drive
M2	Motor		Head Position
M3	Head		Read/Write, Erase
M4	Sensor		Write Protect
	PC Board		Analog Board
	PC Board		Motor Speed Control Board

CABINET & CABINET PARTS (When ordering specify model, chassis & color)

MECHANICAL PARTS LIST

Reference number assigned for parts location.

REF. NO.	PART NO.	DESCRIPTION
1		Door Assembly
2		Door Spring
3		Drive Belt
4		Hub Support
5		Hub Frame
6		Arm Support Assembly
7		Tension Pulley

REF. NO.	PART NO.	DESCRIPTION
8		Head Assembly
9		Eject Spring
10		Eject Plate
11		Carriage Stopper
12		Tension Spring
13		Stepper Pulley

DISK DRIVE LOGIC

PIN NO.	IC 4B	IC 4D
1	L(1)	H
2	L(1)	L
3	L(1)	L(2)
4	P	L(2)
5	P	L(2)
6	P	L(2)
7	L	P
8	P	L
9	P	H
10	L(1)	P
11	P	H(2)
12	P	H(2)
13	L	H(2)
14	H	H(2)
15		H
16		L

Voltages, logic readings and waveforms taken on the Disk Drive while running the following program (with DOS 3.3) and during the period when the Head is not moving unless noted. An initialized diskette, with DOS 3.3 only (no other programs or data), was used in the Disk Drive. Note: Put the Caps Lock key in the down position.

```
10 DS = CHRS(4)
20 PRINT DS; "OPEN SAMS"
30 PRINT DS; "WRITE SAMS"
40 FOR X = 1 TO 50
50 PRINT "THIS IS A TEST"
60 NEXT X
70 PRINT DS; "CLOSE"
80 GOTO 20
```

Logic Probe Display
L = Low
H = High
P = Pulse
* = Open (No light On)

(1) Probe indicates H if diskette is write protected or Head Position Motor is operating.
(2) Probe indicates P when Head Position Motor is operating.
(3) Readings taken after pressing Space Bar on keyboard.
(4) Probe indicates H when any key pressed except Control, Shift, Open Apple, Closed Apple and Reset keys.
(5) Probe indicates H when Caps Lock key is up.
(6) Probe indicates P when any key pressed except Control, Shift, Open Apple, Closed Apple and Reset keys.
(7) Probe indicates P when Computer is in "Basic" mode.
(8) Probe indicates L when the Control key is pressed.

MISCELLANEOUS ADJUSTMENTS

WARNING

It is possible for a defective Disk Drive to write on or erase information on a diskette even if the diskette has been write protected. Check a questionable Disk Drive by first using a diskette that contains programs that have been duplicated on another diskette. Do not leave the alignment diskette in the drive while checking voltages and waveforms unless so instructed in the alignment procedures. The test equipment may cause the disk drive circuits to erase sections of the alignment diskette even when the diskette is write protected with a write protect tab.

EQUIPMENT

Use a Disk Drive test program or Disk Drive Tester capable of turning the Disk Drive On, putting the Disk Drive in Read mode and moving the Head to any track. Use a Dysan Analog Alignment Diskette 208-10 when an alignment diskette is specified in the alignment procedures. Note: The Dysan Alignment Diskette has only alignment patterns on it and does not contain any alignment programs.

MOTOR SPEED ADJUSTMENT

Run the following program to keep the Disk Drive running continuously.

10 X = PEEK (– 16151): X = PEEK (– 16150)

Insert a diskette into the Disk Drive and close the door. Set the Disk Drive on its side so the strobe pattern on the spindle pulley is visible. Use a fluorescent light to view the strobe pattern. Use the outside pattern if a 60 cycle light is being used or the inside pattern if a 50 cycle light is being used. Adjust the Speed Control (VR1) until the strobe pattern appears to stand still.

RADIAL ALIGNMENT

Connect the channel 1 input of a scope to TP8 and the channel 2 input to TP9. Set the scope sweep time to 20mSec, vertical inputs to .2V range and AC input, mode switch to Add mode and one channel inverted. Insert the Alignment Diskette into the Disk Drive and close the door. Turn the Disk Drive On and set the Head to track 16. Observe the two lobes that appear on the scope (trigger the scope on the index burst that occurs at the beginning of the two lobes). The amplitude of the lobes should be within 70% of each other (See Figure 1). If the lobe amplitudes are not within 70% of each other, loosen the two phillips screws holding the Head Position Motor (M2) and rotate the motor until the two lobes are equal or within 70% of each other. Retighten the Head Position Motor screws and recheck the radial alignment by stepping the Head to track 39 and back to track 16, then step the Head to track 00 and back to track 16, checking the two lobes for proper amplitudes each time the Head is on track 16.

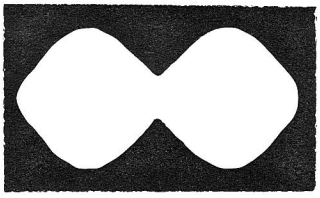

Figure 1

READ CIRCUIT ADJUSTMENT

Connect the channel 1 input of a scope to TP5 and channel 2 input to TP7. Set the scope to Add mode, sweep time to 2 μSec vertical inputs to 2V range and trigger on channel 2. Turn the Disk Drive On and set the Drive to Read mode with the Head on Track 00 (to read the 125kHz pattern on the Alignment Diskette). Insert the Alignment Diskette in the Drive and close the door. Adjust the Threshold Control (R28) for MINIMUM jitter on the leading edges of the pulses and adjust the Pulse Width Duration Control (R33) for MINIMUM crossover distortion on the trailing edges of the pulses. (See Figures 2 and 3).

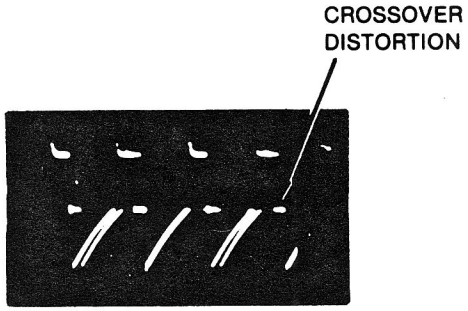

FIGURE 2

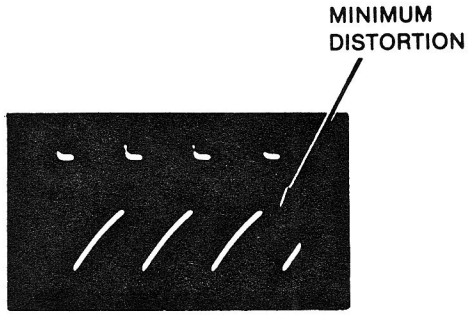

FIGURE 3

Note: The following procedures can also be used for the Read Circuit adjustment.

Turn the Computer On and type in and run the following Basic program.

10 X = PEEK (– 16151)
20 X = PEEK (– 16150)
30 X = PEEK (– 16148)
40 X = PEEK (– 16146)

The program will turn the Disk Drive On in Read mode. Insert the Alignment diskette into the Disk Drive and close the door. Manually set the Head back to track 00. Hook up the scope and adjust Controls R28 and R33 using the instructions given in the first procedure.

MISCELLANEOUS ADJUSTMENTS (Continued)

AZIMUTH CHECK

Connect the channel 1 input of a scope to TP8 and the channel 2 input to TP9. Set the sweep time to .5mSec range, the vertical inputs to the .2V range and AC input and set the mode switch to add mode with one channel inverted. Insert the Alignment diskette into the Disk Drive and close the door. Turn the Disk Drive On and set the Head to track 34. A pattern of four vertical bars should appear on the scope (trigger the scope on the index burst that occurs at the beginning of the bars). The correct azimuth is indicated when the two inside bars are longer than the two outside bars. See Figure 4.

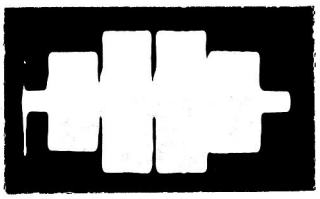

Figure 4

TRACK 00 STOP ADJUSTMENT

Connect the input of a scope to TP9. Set the scope vertical input to the .5V range, AC input and the sweep time to 10μSec. Insert the Alignment Diskette into the Disk Drive and close the door. Turn the Disk Drive On and set the Head to track 00. Verify that the Head is on track 00 by checking for a .5V peak to peak, 125kHz signal at TP9. Loosen the phillips screw holding the track 00 stop. Adjust the Stop for a clearance of .005″ between the Stop and the raised cam and retighten the track 00 Stop screw. See Figure 5.

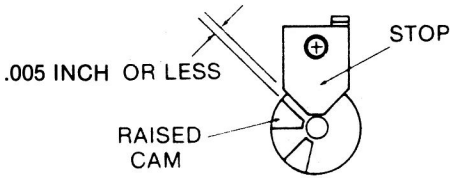

Figure 5

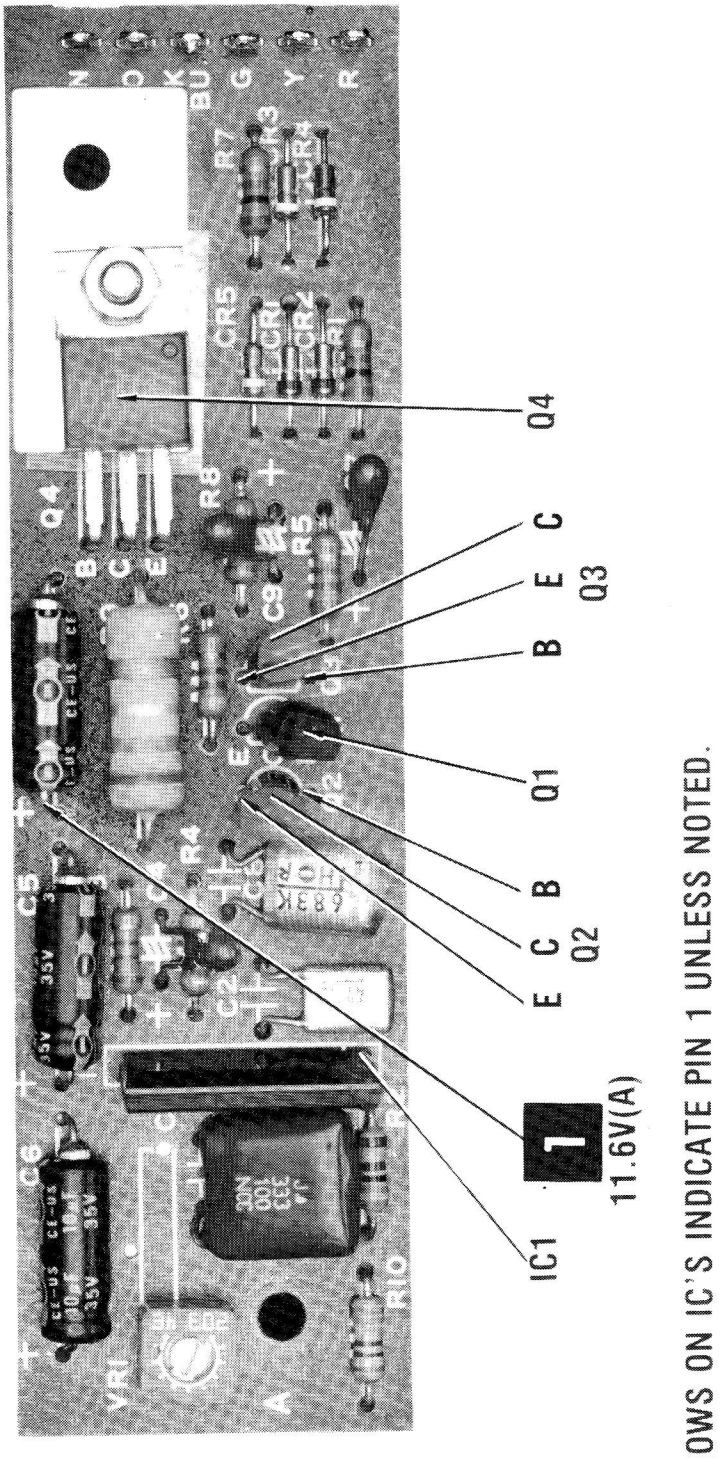

DISK DRIVE MOTOR SPEED CONTROL BOARD A Howard W. Sams CIRCUITRACE® Photo

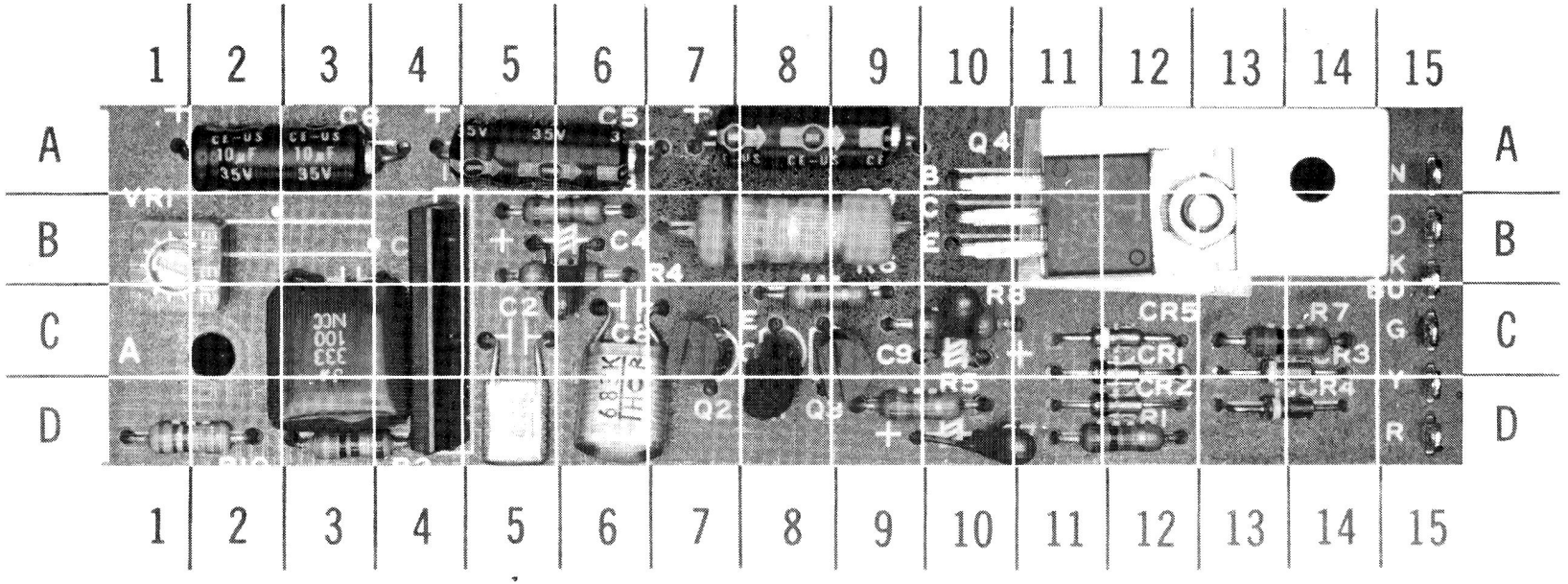

A Howard W. Sams GRIDTRACE™ Photo

DISK DRIVE MOTOR SPEED CONTROL BOARD

DISK DRIVE MOTOR SPEED CONTROL BOARD GridTrace LOCATION GUIDE

C1	A-8	C8	C-6	IC1	C-4	R3	B-6	R10	D-2
C2	D-5	C9	C-10	Q1	C-8	R4	B-6	VR1	B-1
C3	C-3	CR1	C-12	Q2	C-7	R5	D-10		
C4	B-6	CR2	D-12	Q3	C-9	R6	C-8		
C5	A-6	CR3	C-14	Q4	B-11	R7	C-14		
C6	A-3	CR4	D-14	R1	D-12	R8	C-8		
C7	D-10	CR5	C-12	R2	D-3	R9	B-8		

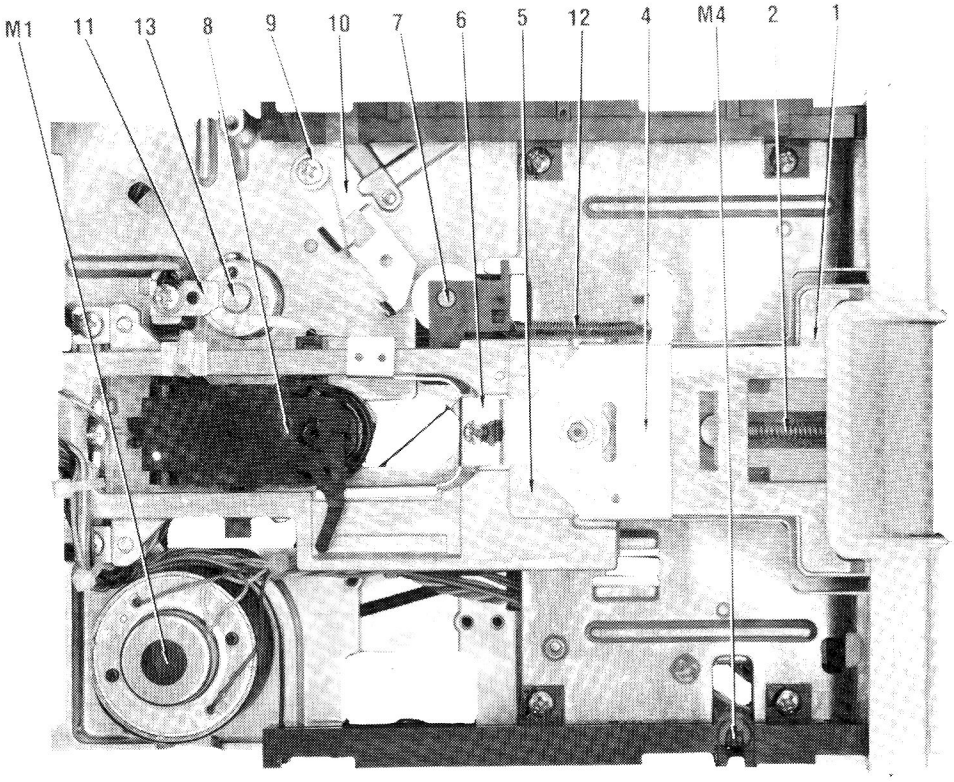

MECHANICAL-TOP VIEW

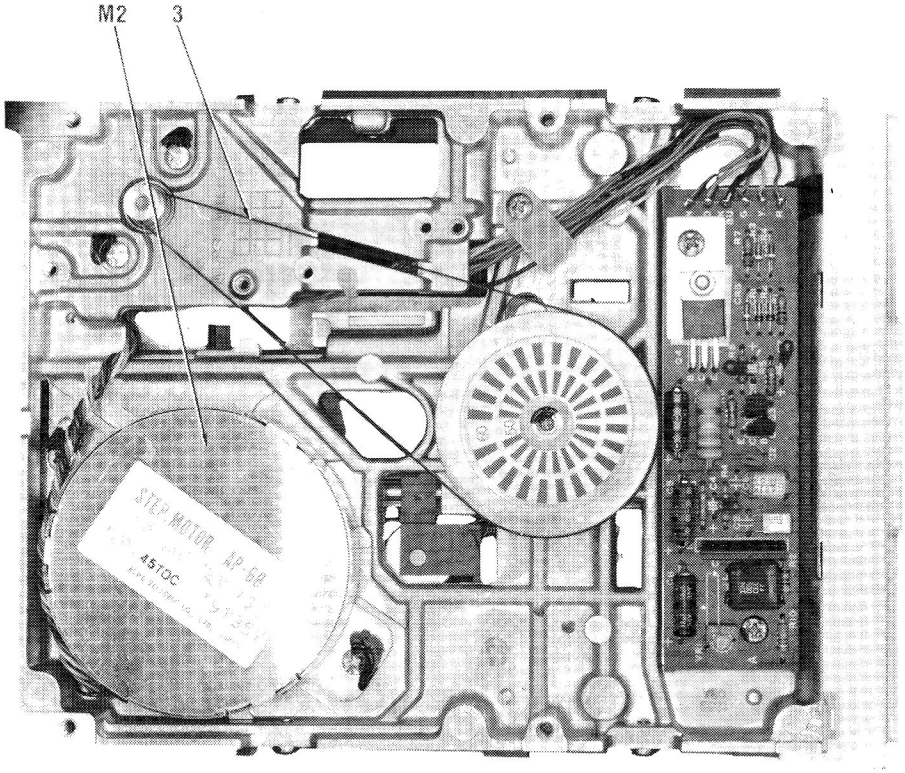

MECHANICAL-BOTTOM VIEW